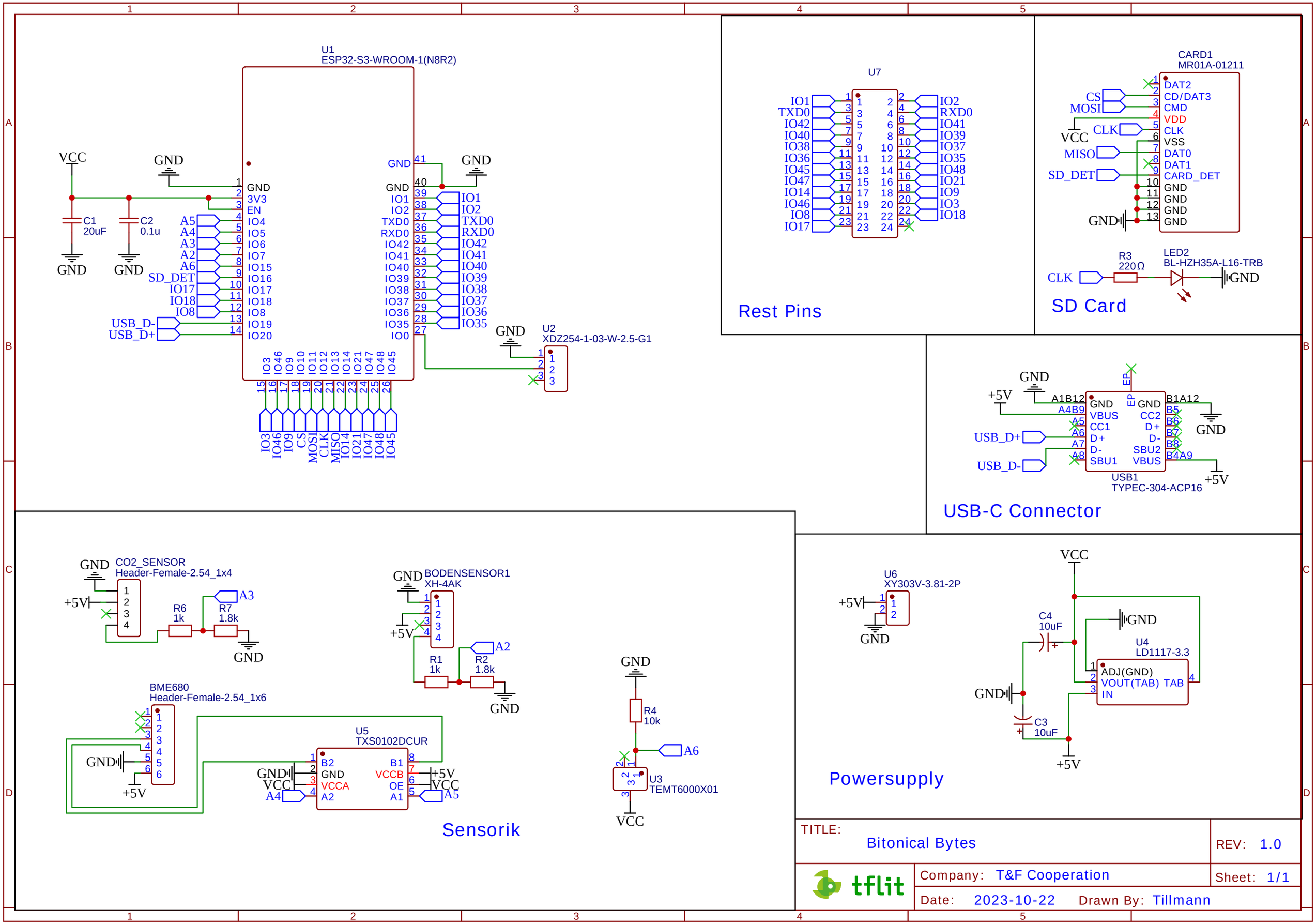
U1
ESP32-S3-WROOM-1(N8R2)
VCC
GND
C1
20uF
C2
0.1u
3V3
EN
IO4
IO5
IO6
IO7
IO15
IO16
IO17
IO18
IO8
IO19
IO20
IO1
IO2
TXD0
RXD0
IO42
IO41
IO40
IO39
IO38
IO37
IO36
IO35
IO0
A5
A4
A3
A2
A6
SD_DET
IO17
IO18
IO8
USB_D-
USB_D+
IO3
IO46
IO9
IO10
IO11
IO12
IO13
IO14
IO21
IO47
IO48
IO45
CS
MOSI
CLK
MISO
U2
XDZ254-1-03-W-2.5-G1
U7
Rest Pins
CARD1
MR01A-01211
DAT2
CD/DAT3
CMD
VDD
CLK
VSS
DAT0
DAT1
CARD_DET
R3
220Ω
LED2
BL-HZH35A-L16-TRB
SD Card
+5V
A1B12
A4B9
B1A12
B4A9
EP
USB1
TYPEC-304-ACP16
USB-C Connector
CO2_SENSOR
Header-Female-2.54_1x4
R6
1k
R7
1.8k
BODENSENSOR1
XH-4AK
R1
1k
R2
1.8k
BME680
Header-Female-2.54_1x6
U5
TXS0102DCUR
B2
VCCA
A2
B1
VCCB
OE
A1
R4
10k
U3
TEMT6000X01
U6
XY303V-3.81-2P
C4
10uF
U4
LD1117-3.3
ADJ(GND)
VOUT(TAB) TAB
IN
C3
10uF
Powersupply
Sensorik
TITLE:
Bitonical Bytes
REV: 1.0
tflit
Company: T&F Cooperation
Sheet: 1/1
Date: 2023-10-22
Drawn By: Tillmann